thermoscientific

Thermo Scientific single-use mixing technologies

HyPerforma and imPULSE single-use mixing for upstream and downstream applications

ThermoFisher SCIENTIFIC

Contents

Proven mixing solutions for every budget and application

Thermo Scientific™ mixing products address cGMP manufacturing applications both upstream and downstream, and feature companion Thermo Scientific™ BioProcess Container (BPC) products designed specifically for superior performance in our systems. These products, whether standard or customized, deliver high value and dependability.

Excellent performance, high value, and customizable

Two primary mixing technology platforms

- Thermo Scientific™ HyPerforma™ Single-Use Mixers (S.U.M.s)—top-down–stirred tank design: available in sizes ranging from 50 L to 2,000 L
- Thermo Scientific™ imPULSE™ Single-Use Mixers (S.U.M.s)—proprietary bottom-mounted imPULSE technology design: available in sizes ranging from 30 L to 5,000 L

Multiple mixing formats

- Stand-alone units for both imPULSE and HyPerforma stirred-tank platforms
- DS 300—available in plastic, in sizes ranging from 50 L to 300 L
- Thermo Scientific™ HyPerforma™ Mixtainer™ system—economical top-down stir-bar mixer for low-cost mixing: available in sizes ranging from 50 L to 200 L

Service and support

Each mixer comes with a comprehensive documentation package (user guide, equipment turnover package, validation guide) and is backed by our experienced team of technical support and field application specialists. Contact your Thermo Fisher Scientific BioProduction account manager today to discuss your mixing needs and find the right mixing solution for your business.

HyPerforma Single-Use Mixer (S.U.M.)

Efficient and powerful mixing

The upgraded Thermo Scientific HyPerforma Single-Use Mixer (S.U.M.) has been enhanced to improve its functionality, ease of use, and ergonomics. Since the launch of the HyPerforma S.U.M. in 2006, we've maintained one of the largest installation bases of mixing systems, which are in daily use by many global biopharmaceutical companies. Our customers appreciate the proven, advanced engineering of the HyPerforma S.U.M.—the design of which is based on a traditional stirred-tank mixing system—as well as our ability to rapidly deliver BPC systems designed to our customers' exact specifications.

Design enhancements

The HyPerforma S.U.M. is available in six sizes—50 L, 100 L, 200 L, 500 L, 1,000 L, and 2,000 L—and comes with a 5:1 mixing volume turndown ratio. The effective mixing volumes range between 10 L and 2,000 L.

Areas of application	
Upstream	**Downstream**
• Media preparation • Final formulation steps • Buffer preparation • Harvest vessels • Large-volume mixing up to 2,000 L	• Pooling and transfer • Product suspension (additive) • Mixing and storing multiple batches • Buffer preparation • Viral inactivation

Features and benefits

- Cable management tree for improved ease of use with BPC process lines for system organization
- Access door for convenient BPC loading on the 500 L, 1,000 L, and 2,000 L mixing systems
- AC motor or brushless DC motor options; DC motor includes encoder feedback for improved RPM accuracy and is GFCI-compatible (electrical box not available with DC motors)
- Water-jacketed (heating) and non-jacketed (no heat transfer) options. Improved high-flow water jacket with side and bottom jacket to improve system heat transfer
- Adjustable powder hanger that fits 1 kg, 5 kg, and 25 kg Thermo Scientific™ Powdertainer™ BPCs
- 2 swivel-locking casters and push handles for better maneuverability of the units (except 2,000 L)
- BPC tab holders for easy single-use container setup
- Dual-probe opening for redundancy and low-volume pH and conductivity monitoring
- Open-cart frame for easier cleaning and updated Mettler-Toledo™ load cells, with new lock-out device

HyPerforma S.U.M. specifications

S.U.M. tank design and bioprocess containers

S.U.M. tank design

The vessel of the HyPerforma S.U.M. is ergonomically designed and has a compact footprint with ease of use in mind. Some features include:

- A lockout tri-clamp system, to protect load cells while moving the S.U.M.
- Clear access to harvest lines with the open-frame design
- Improved surface finish, for increased cleanability
- Integrated handles, for system mobility
- Sight windows and level indicators, for leveling batch liquids

Controllers and options

We offer integration with a variety of controller systems for the HyPerforma S.U.M. through our network of integration partners. Our open-architecture approach allows you to integrate with many controllers, potentially including one already in use in your facility. Additional options include:

- Cable management tree
- Electrical box for remote agitation control
- Load cells and powder arm assembly

S.U.M. BioProcess Containers (BPCs)

Thermo Scientific BPCs are available for the HyPerforma S.U.M. in standard or customized configurations, with your choice of Thermo Scientific CX5-14 or Aegis™5-14 films. Our films have one of the cleanest particulate profiles in the industry and are unsurpassed in their robustness, flexibility, and stretchability. Our BPCs can be used for pooling and storing your liquid-to-liquid and powder-to-liquid bioprocess mixing applications. BPC systems come in open- and closed-top designs.

Custom BPCs accommodate a range of applications. A variety of components have been qualified to maximize design flexibility, including:

- Single-use sensors
- Tubing and clamps
- Connector types

HyPerforma S.U.M specifications

Specifications	50 L	100 L	200 L	500 L	1,000 L	2,000 L
Maximum liquid working volume	50 L	100 L	200 L	500 L	1,000 L	2,000 L
Minimum liquid working volume	10 L	20 L	40 L	100 L	200 L	400 L
Fluid geometry at working volume (height:diameter) ratio	1.5:1	1.5:1	1.5:1	1.5:1	1.1:1	1:1
Overall reactor geometry (height:diameter) ratio	1.9:1	1.5:1	1.95:1	1.7:1	1.2:1	1.2:1
Impeller (quality x blade count)	1 x 3	1 x 3	1 x 3	1 x 3	1 x 3	1 x 3
Mixing rate range	30–350 rpm	30–350 rpm	30–350 rpm	30–350 rpm	30–350 rpm	30–350 rpm
Tank overall dimensions (W x L x H, including cable management tree and e-box)	120 x 96 x 154 cm (47 x 38 x 61 in.)	121 x 101 x 154 cm (48 x 40 x 61 in.)	124 x 121 x 175 cm (49 x 48 x 69 in.)	150 x 145 x 193 cm (59 x 57 x 76 in.)	178 x 172 x 195 cm (70 x 68 x 77 in.)	210 x 192 x 225 cm (83 x 76 x 89 in.)

Thermo Scientific Mixtainer System

Mixtainer key features

The Thermo Scientific™ Mixtainer™ System is an integrated, single-use sterile unit for mixing of cell culture media and other process liquids such as buffers, reagents, and bulk drug precursors or products. The Mixtainer system utilizes a sophisticated BPC constructed of CX5-14 film with a plastic dish welded into the base of the BPC. The plastic dish contains a magnetic stir bar that is held in the proper operating position using an integrated locking ring.

- Available in 50 L, 100 L, and 200 L volumes
- Standard BPCs available for liquid-to-liquid and powder-to-liquid mixing
- Supporting hardware optimized for mixing, storage, transport, and discharge in a closed system to help minimize the risk of cross-contamination

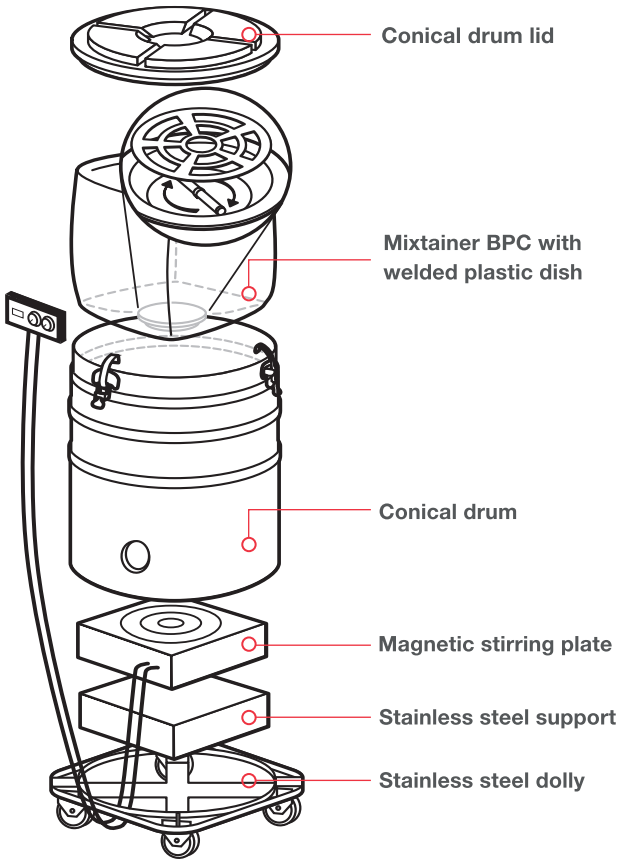

Mixtainer BPCs

Four ports, top dispense, powder/liquid mixing:

- Line 1: 9.5 mm (0.38 in.) Quick Connect insert with 16.5 cm (6.5 in.) dip tube length: 91 cm (36 in.)
- Line 2: 6.3 mm (0.25 in.) male luer-lock tube length: 91 cm (36 in.)
- Line 3: 6.3 mm (0.25 in.) female luer-lock tube length: 91 cm (36 in.)
- Line 4: 9.5 mm (0.38 in.) Quick Connect body tube length: 91 cm (36 in.)

Size	Cat. No.
50 L	SH30687.04
100 L	SH30687.05
200 L	SH30687.06

Mixtainer drum

Conical drum: Top dispense, with clamps

Size	Cat. No.
50 L	SV50517.11
100 L	SV50517.12
200 L	EU SV50517.13

Mixtainer accessories

Description	Area	Cat. No.
Magnetic stirring plate: IKAMAG™ motor and support required. 230 V, 50/60 Hz, 0.5 A	EU	SV30097.01
Magnetic stirring plate: IKAMAG™ motor and support required. 115 V, 50/60 Hz, 1 A	US	SV30097.02
Stainless steel support	EU	SV30097.03
Stainless steel support	US	SV30097.04
Stainless steel dolly: Dimensions (D x H) 61.6 x 15.2 cm (24.3 x 6.0 in.)	Universal	SV50109.01

Thermo Scientific HyPerforma DS 300 Single-Use Mixer

HyPerforma DS 300 key features

The Thermo Scientific™ HyPerforma™ DS 300 Single-Use Mixer (S.U.M.) is a modular mixing system consisting of a mixing station that mates to plastic drums containing single-use BPCs or tank liners, offering the user a cost-effective, docking station–style mixing platform with multiple volume options.

The docking station consists of:

- Stainless steel base with locking casters
- Adjustable handle
- Tethered handheld control device
- Electrical vertical lift mechanism with integration height indicator
- Motor with motor mount and three sizes of drive shafts
- Adjustable tools: spanner and torque wrench
- Adjustable-angle motor head and positioned drum are available as add-on options
- Top-drain support containers available in 50 L, 100 L, 200 L, and 300 L sizes; bottom-drain drums available in 50 L, 100 L, and 200 L sizes
- Top-drain tank liners available in all four sizes from 50 L to 300 L
- Tank liners available in three sizes from 50 L to 200 L, with bottom-access ports
- Closed-top 3D BPCs, with both top- and bottom-drain access ports, available in 50 L, 100 L, and 200 L sizes
- Optional dollies available for all drum sizes

Thermo Scientific imPULSE Single-Use Mixer (S.U.M.)

The Thermo Scientific™ imPULSE™ Single-Use Mixer (S.U.M.) is a mixer for any application. The design enables uniform, superior mixing in every model that easily scales from 30 L all the way up to 5,000 L, giving you consistent and quick scale-up. The innovative disc technology, flexible design, and custom upgrades are the innovations behind the superior and reproducible mixing results of the imPULSE S.U.M. family.

Superior mixing in every model

The imPULSE™ mixing system gives users superior mixing with configurable high-end controls and monitors to fit specific process requirements. Various options for insturmentation, powder bag handling, and a peristalitic pump are available to make your system custom-tailored for your process.

Ordering information

Size	Cat. No.
30 L	IM00030
50 L	IM00050
100 L	IM00100
250 L	IM00250
500 L	IM00500
750 L	IM00750
1,000 L	IM01000
1,500 L	IM01500
2,000 L	IM02000
3,000 L	IM03000
5,000 L	IM05000

Standard features
Available in 30 L–5,000 L
304 L stainless steel tank and sliding window or door and window
Clean room grade casters (30 L–750 L)
Rolling diaphragm
Nema 4x motor controller

Additional customized options
Clean room grade swivel casters
Powder BPC lifting system with hanger (jib crane and manual power winch)
Peristaltic pump and controller assembly
Integrated pump/tray platform
Mixing tank jacket and insulation
Auto inflate and vent controls
Six channel data logger with display
Programmable logic controller (PLC)
Disposable/Conventional Process Monitoring (pH, DO, CO_2)
Weight indication system with load cells
Guided wave radar
Seismic restraint system
Integrated control panel


WARNING
Arc Flash And Shock Hazard
Appropriate PPE Required
ANGER
HIGH VOLTAGE
120 VOLTS

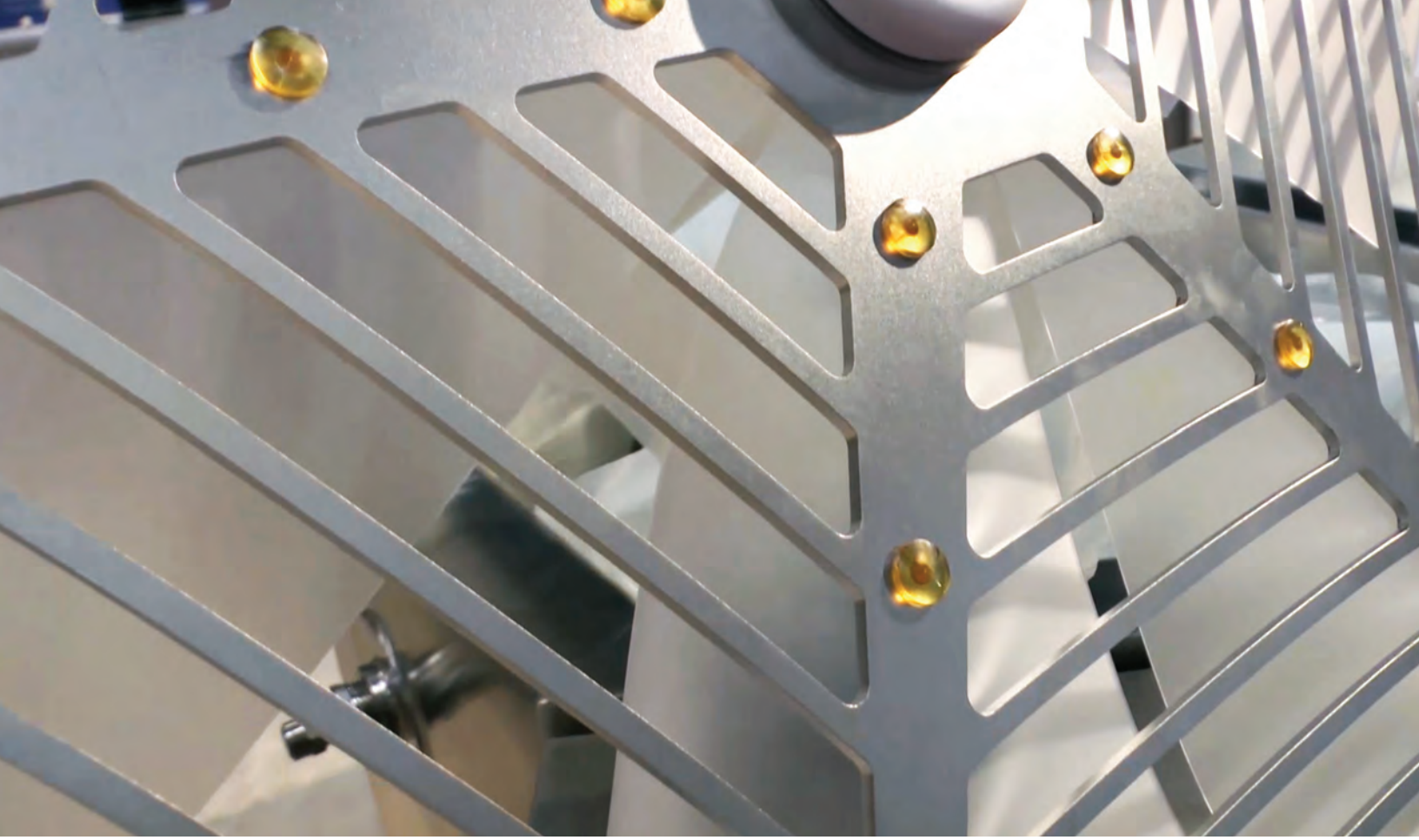

imPULSE mixing disc technology

imPULSE mixing disc technology

The disc, an integrated part of the single-use BPC, is designed with slots and silicone flaps. The moving disc creates a pulsing action: The flaps open as the disc moves up from the bottom of the mixing bag and fluid flows through the slots of the disc. On the downstroke, the flaps close as the disc moves down and energy is directed down and channeled through the space between the mixing disc profile and the vessel side walls. The velocity of the displaced liquid provides robust mixing.

A rolling diaphragm provides an interface between the BPC and the movable shaft with the mixing disc. There are no contact surfaces between the side walls and the diaphragm; therefore, the system does not generate particulates.

Linear scalability

The imPULSE mixing disc diameter increases proportionally as the size of the vessel increases. The ratio of the displaced liquid volume to the vessel volume is the same from all sizes ranging from 30 L to 5,000 L. This enables consistent and reproducible results as processes are seamlessly scaled up across all sizes.

imPULSE mixing disc features

In addition to the disc technology and linear scalability, the imPULSE S.U.M. has unique features that contribute to thorough mixing, product safety, and reproducibility.

- Speed is variable from 0 to 2 cycles per second (not applicable on the core model); no vortex is created
- Mixes from full to empty, and suspensions are maintained down to empty

Mixing efficiencies

A study of mixing performance

A computational fluid dynamics (CFD) study was conducted to predict the mixing performance of the imPULSE S.U.M.s across a range of small, medium, and large tanks and fluid viscosities.

Mixing patterns and observations of general behavior

The general behavior of the imPULSE S.U.M.s exhibits flow circulation. The CFD figure below shows the overall patterns that were observed.

The flow would travel up along the outer walls, cross over at the top of the tank and return in a downward moving column. Additionally, the figure below illustrates that the flows were fundamentally unchanged across all three sizes that were tested and the pattern of flow was consistent. This was expected since the mixing disc is located in the center and would push fluid on the downstroke, but did not push on the upstroke due to the flaps opening and closing as designed. This meant that the bulk flow was accelerated on the downstroke, and on the upstroke it created a more complex local mixing flow pattern around the mixing disc.

Flow circulation patterns for different tank sizes (plotted at time = 6.25 s)

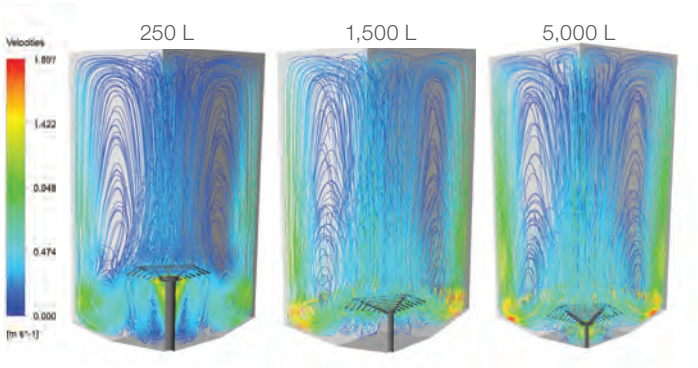

Fast and scalable fluid transfers

Another evaluation of the mixing disc effectiveness was to see how quickly the momentum from the mixing disc transferred through the fluid. To evaluate this, a velocity of 0.1 m/s was selected and the results were monitored to see how quickly this velocity reached the top of the tank. The figure below shows the results on one of the symmetry planes. It shows contour plots of velocity, clipped at 0.1 m/s. This means that anything above this velocity appears in red. it was shown that the velocity of 0.1 m/s was reached at the top of the tank within 4 seconds for the 250 L and 1,500 L tanks and within 5 seconds for the 5,000 L tank. This was a useful result because it showed that regardless of the tank size, agitation and significant fluid motion can be achieved quickly throughout the entire tank.

Clipped velocity contours: red = 0.1 m/s and above; blue = stagnant region

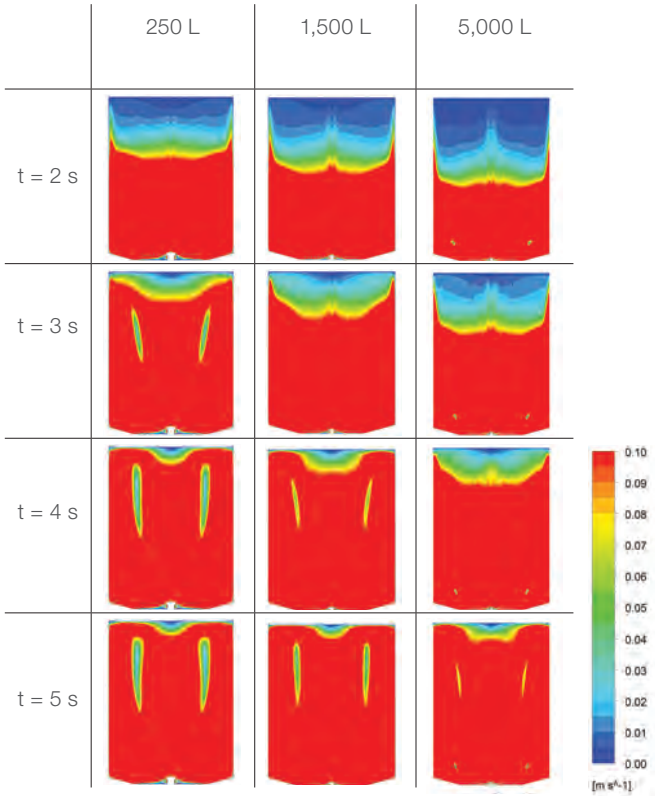

imPULSE BioProcess Containers

Efficient and customizable

The standard imPULSE mixing BPCs are made of ASI 26/77 polyethylene two-layer film. This film presents excellent profiles for the fluid contact layer, while the outer layer creates a strong barrier.

These BPCs are available with four inlet/outlet lines and a powder addition port. The standard tube sets connect to the imPULSE Mixing BPC for liquid addition, powder addition, recirculation, inflation, and vent control. The tube sets are modular and can be customized to best suit your process.

Color key

- Single-use BPC assembly
- Inflation tube set
- Recirculation tube set
- Vent tube set
- Water fill tube set

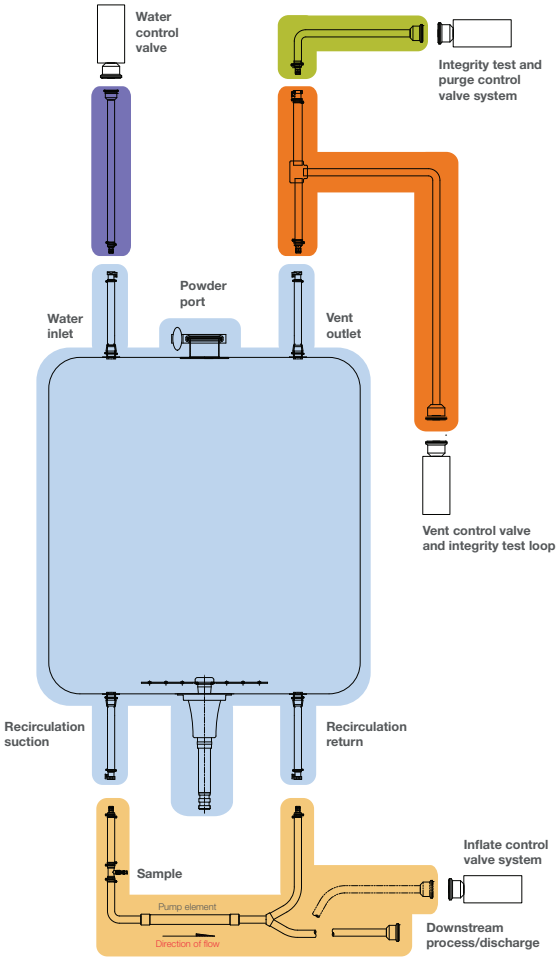

Thermo Scientific imPULSE MDS Single-Use Mixing System

Mixing, docking, and shipping

The imPULSE MDS has all the benefits and mixing capabilities of the imPULSE Core and Elite S.U.M.s except that the motor is mounted on the docking station, allowing vessels to be easily interchanged. A loading/unloading hoist eases the transfer of the shipping vessels on and off the station.

Features and benefits

- The disc and film flaps are an integrated part of the BPC; multiple slots and film flaps provide consistent mixing
- Turbulence created by the vessel shape and the disposable mixing unit pulls the content into the fluid stream without creating a vortex
- Variable mixing speed, low shear, and low air entrainment

Standard options	
Size	Available in 30 L and 50 L
Docking station	Docking station material of construction: 304 L stainless steel with loading hoist.
BPC holding vessel	Vessel material of construction: Co-polymer propylene
Clean room–grade casters	Four clean room–grade casters, which facilitate transfer of the station
Rolling diaphragm	A rolling diaphragm provides the pumping action to the mixing disc. This will not abrade the surfaces or produce particulates
Integrated control panel	An integrated control panel with relay logic, manual push buttons, a selector switch interface, and digital speed indication

The imPULSE MDS systems can be customized to meet specific needs. Please contact your Thermo Fisher sales representative for more information.

Mixing platform comparisons

Detailed comparison of all Thermo Scientific mixers






Mixer model	imPULSE S.U.M. Core	imPULSE S.U.M. Elite	HyPerforma S.U.M.	DS 300 S.U.M.	imPULSE MDS	Mixtainer System
Description	Mixing—simple control	Mixing—high control	Mixing—simple control	Mix and dock	Mix, dock, ship	Mix, dock, ship
Size range (L)	30 L, 50 L, 100 L, 250 L, 500 L, 1,000 L, 2,000 L, 3,000 L, 5,000 L	30 L, 50 L, 100 L, 250 L, 500 L, 1,000 L, 2,000 L, 3,000 L, 5,000 L	50 L, 100 L, 200 L, 500 L, 1,000 L, 2,000 L	50 L, 100 L, 200 L, 300 L	30 L, 50 L	50 L, 100 L, 200 L
Linear scalability	Yes	Yes	Yes	Yes	Yes	Yes
Tank temperature control	No	Jacket heat	Jacket heat	No	No	No
BPC auto inflation and auto vent control	No	Yes	No	No	No	No
Sensors	No	pH, DO, CO_2, temperature, weight, conductivity, fluid height	pH and DO, temperature, weight, pressure	No	No	No
Base mobility	Fixed/casters	Fixed/casters	Fixed/casters	Casters	Fixed/casters	Casters
Mixing technology	Bottom-imPULSE	Bottom-imPULSE	Top-stir tank	Top-stir tank	Bottom-imPULSE	Bottom-stir bar
Controls	Self sustained e-box	e-box	e-box	Handheld controls	e-box, PLC, PC, Delta V	Power, speed
Minimum mixing volume	1%	1%	20%	20%	1%	1%
Drain location	Bottom	Bottom	Bottom	Bottom	Bottom	Bottom
Particulate generation	None	None	None	None	None	Med
FAT/SAT/service/PM/ validation support	Yes	Yes	Yes	Yes	Yes	Yes
Fluid vortex	No	No	No	No	No	No
Tank materials	Stainless steel	Stainless steel	Stainless steel	Plastic	Stainless steel/ plastic	Plastic
Sparge capable	No	Yes	Yes	No	No	No
Ceiling height constraints	30–2,000 L: <8 ft. 3,000 L: 9 ft. 5,000 L: 10.5 ft. (without crane)	30–2,000 L: <8 ft. 3,000 L: 9 ft. 5,000 L: 10.5 ft. (without crane)	50 L, 200 L: <8 ft. 500 L, 1,000 L: 9 ft. 2,000 L: 10 ft.	50 L–300 L: <8 ft.	30 L, 50 L: <8 ft.	<8 ft.

thermoscientific

Integrated solutions for bioproduction

Single-Use Mixers (S.U.M.s)
A variety of options up to 5,000 L for both upstream and downstream applications

Liquid- and dry-format media
We offer both custom manufacturing and a full range of chemically defined performance media and supplement products

BioProcess Containers (BPCs)
A variety of configurations up to 2,000 L for liquid harvest, storage, and transportation

Sera
Our sera are the industry standards for consistent quality and reliability

Single-Use Bioreactors (S.U.B.s)
50–2,000 L bioreactors capable of integrating with an existing control system

Buffers and process liquids
Custom and standard buffers and process liquids, including Gibco™ Water for Injection (WFI) quality water

Integrity testing systems
A true point-of-use integrity testing system to confirm the integrity of BPCs before use

Find out more at **thermofisher.com/sum**

ThermoFisher SCIENTIFIC

For Research Use or Further Manufacturing. Not for diagnostic use or direct administration into humans or animals.